REVISIONS			
REV.	DESCRIPTION	DATE	APPROVED
1	ORIGINAL PRINT	6/1/2016	N. LAWRENCE

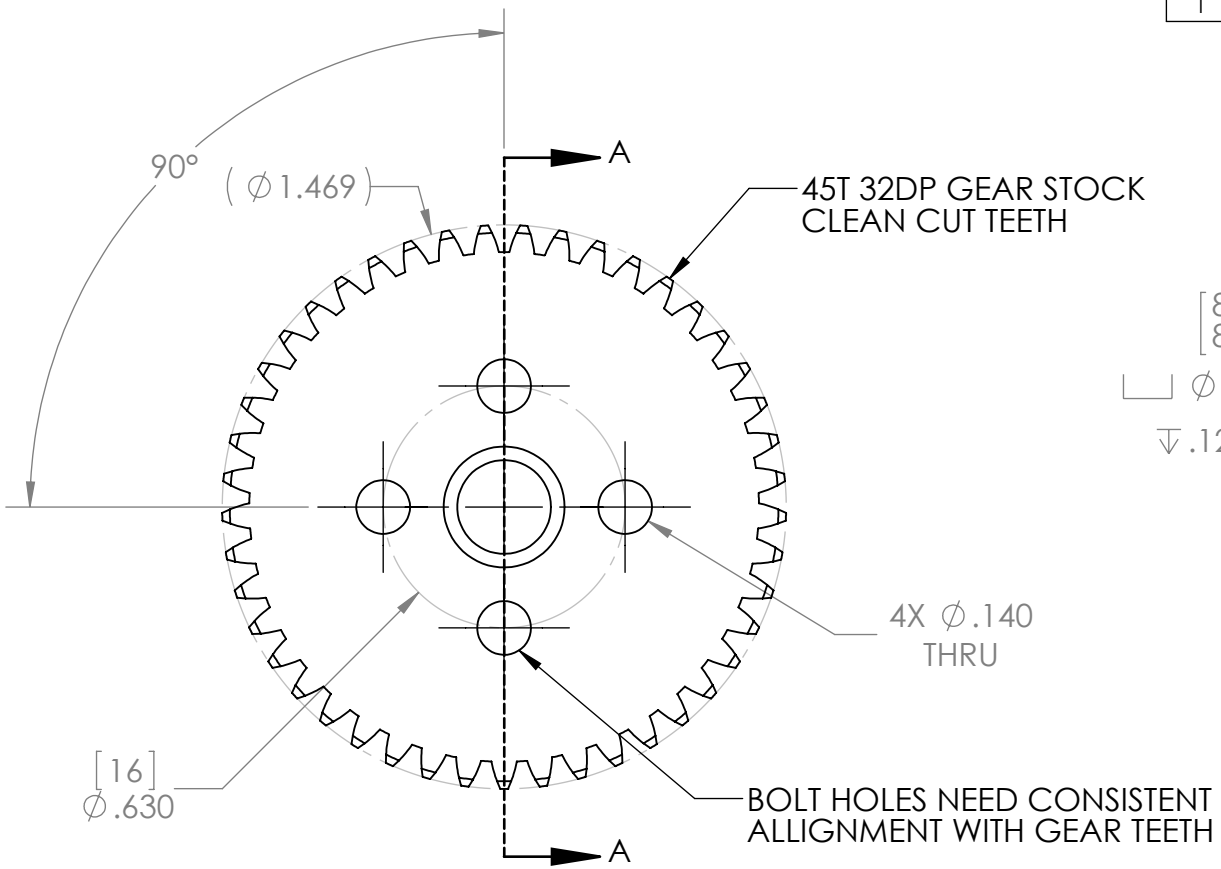

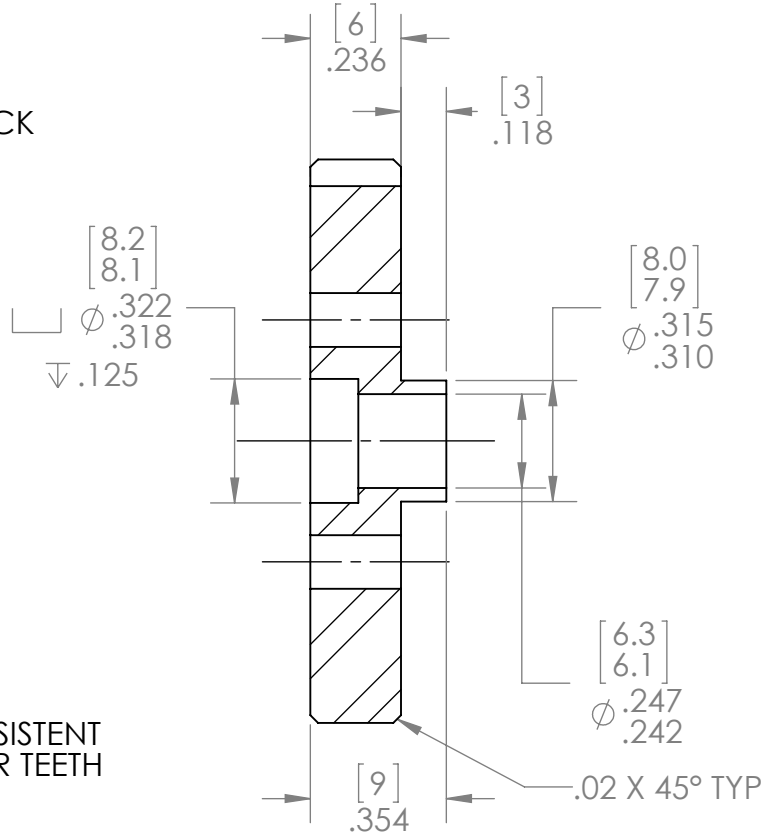

SECTION A-A

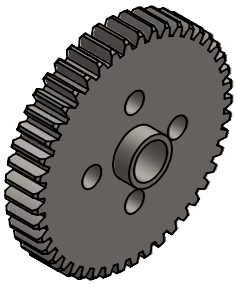

UNLESS OTHERWISE SPECIFIED:		NAME	DATE
DIMENSIONS ARE IN INCHES TOLERANCES: FRACTIONAL ±1/32 ANGULAR: MACH ±1° BEND ±5° ONE PLACE DECIMAL ±0.1 TWO PLACE DECIMAL ±0.01 THREE PLACE DECIMAL ±0.005	DRAWN	NL	6/1/16
	CHECKED		
	ENG APPR.		
	MFG APPR.		
INTERPRET GEOMETRIC TOLERANCING PER:	Q.A.		
MATERIAL 4140 AISI STEEL	COMMENTS: DUAL DIMENSIONS ARE IN MILLIMETERS. BREAK ALL SHARP EDGES.		
FINISH ZINC PLATED			
DO NOT SCALE DRAWING			

AndyMark

TITLE:

45T 32DP 6mm Bore Nub Gear

SIZE	DWG. NO.	REV
A	am-3409	1

SCALE: 2:1 | WEIGHT: | SHEET 1 OF 1

5 4 3 2 1