REV	DESCRIPTION OF CHANGES
1	ORIGINAL PRINT

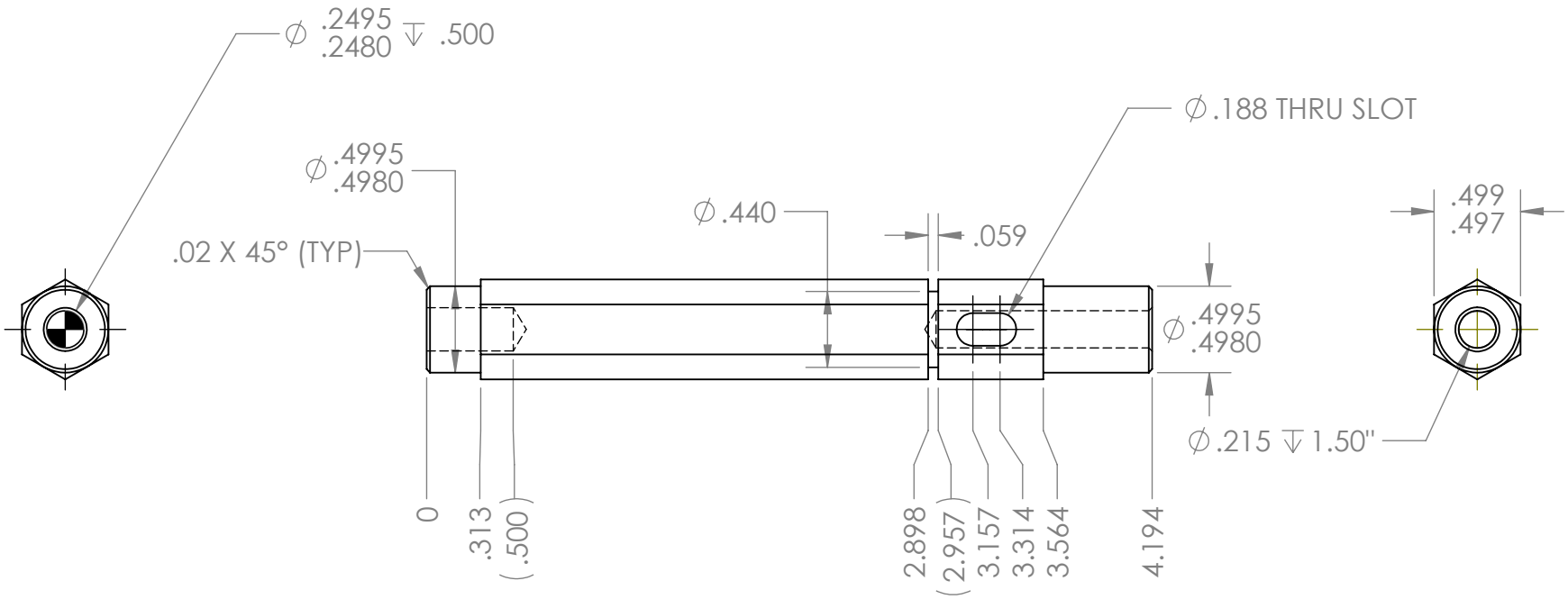

UNLESS OTHERWISE SPECIFIED:		NAME	DATE
DIMENSIONS ARE IN INCHES TOLERANCES: FRACTIONAL ± ANGULAR: MACH ± BEND ±5° TWO PLACE DECIMAL ±0.010 THREE PLACE DECIMAL ±0.005	DRAWN	NL	11/20/15
	CHECKED		
	ENG APPR.		
	MFG APPR.		
INTERPRET GEOMETRIC TOLERANCING PER:	Q.A.		
MATERIAL 4140 STEEL	COMMENTS: DUAL DIMENSIONS ARE IN MILLIMETERS		
FINISH ZINC PLATED			
DO NOT SCALE DRAWING			

AndyMark

TITLE:

Afterburner
Shift Shaft

SIZE	DWG. NO.	REV
A	am-3347	1

SCALE: 1:1 | WEIGHT: | SHEET 1 OF 1

5 4 3 2 1