REVISION HISTORY			
REV.	DESCRIPTION	DATE	DRAWN BY
1	ORIGINAL PRINT	7/13/2021	N. LAWRENCE

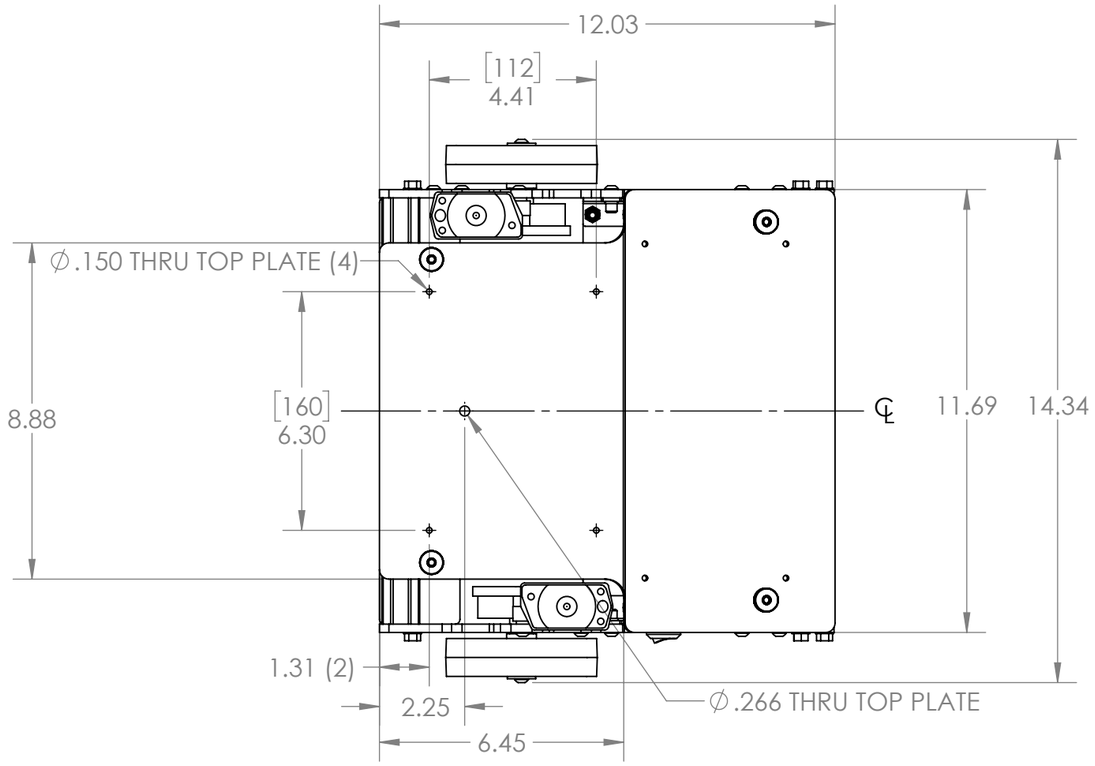

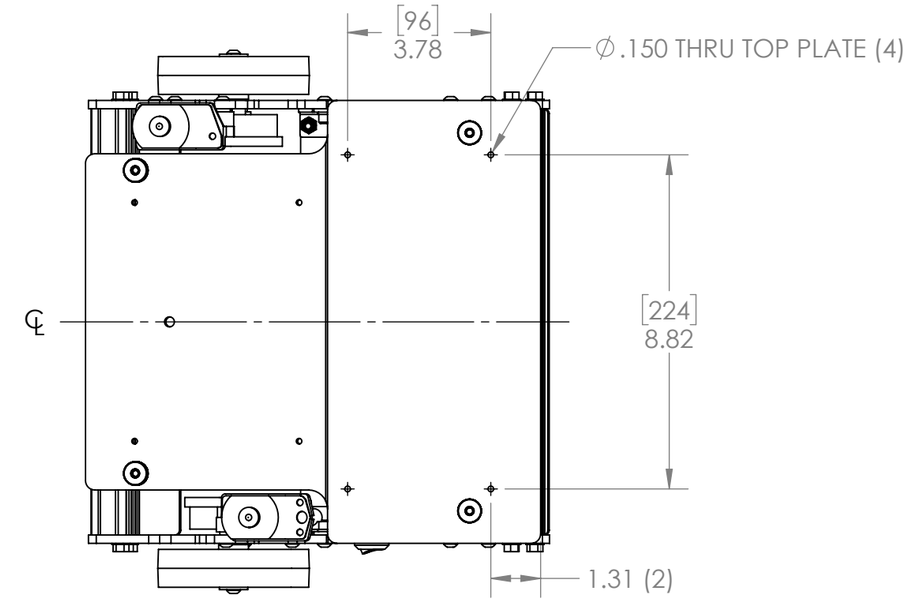

VIEW A-A
10°

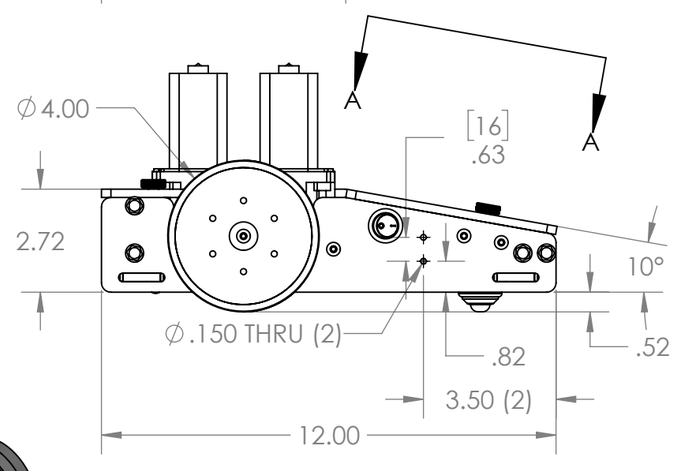

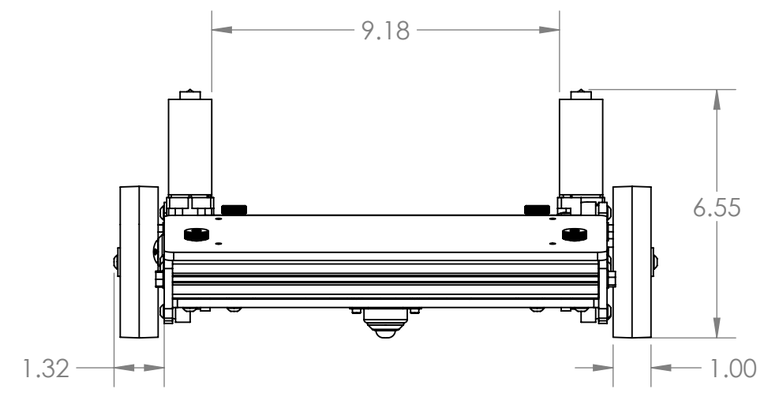

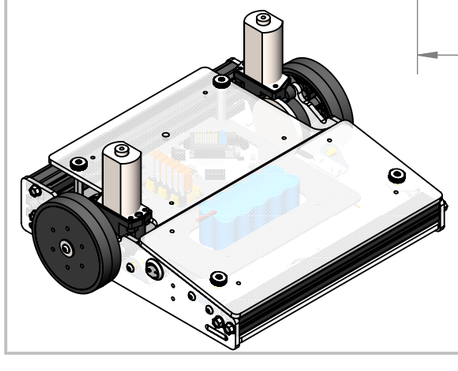

*** SEE CAD FOR ADDITIONAL TOOLPATH INFO***

UNLESS OTHERWISE SPECIFIED:		COMMENTS:
DIMENSIONS ARE IN INCHES		DUAL DIMENSIONS ARE IN MILLIMETERS.
TOLERANCES:		BREAK ALL SHARP EDGES.
FRACTIONAL	±1/16	
ANGULAR: MACH	±1°	
ANGULAR: BEND	±5°	
ONE PLACE DECIMAL	±0.1	
TWO PLACE DECIMAL	±0.01	
THREE PLACE DECIMAL	±0.005	
FOUR PLACE DECIMAL	±0.0005	
MATERIAL		
FINISH		
DO NOT SCALE DRAWING		

	NAME	DATE
CHECKED	KK	7/13/21
ENG APPR.		
MFG APPR.		
Q.A.		

AndyMark

TITLE:

NAVIGATOR ROBOT

SIZE	DWG. NO.	REV
B	am-4572	1
SCALE: 1:4	SHEET 1 OF 1	