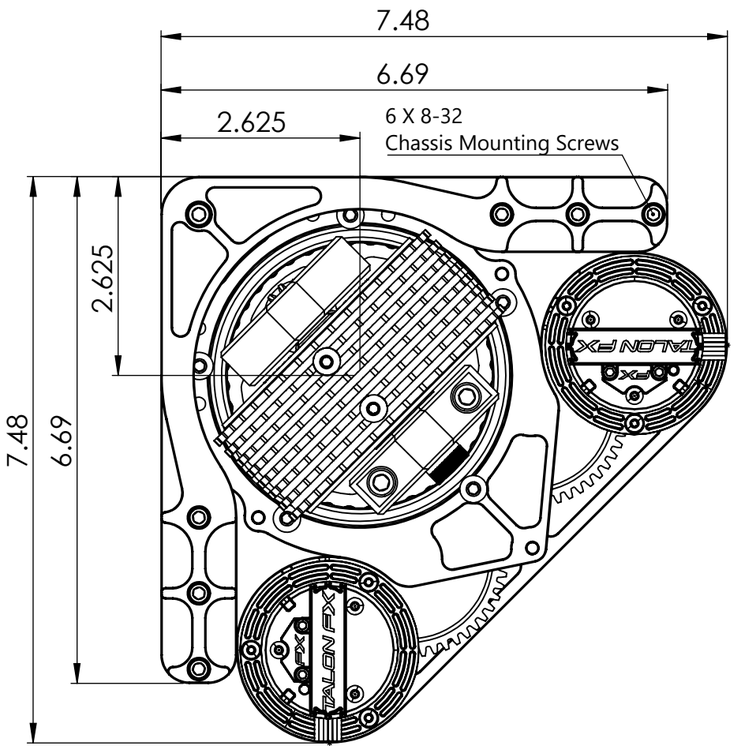
7.48
6.69
2.625
6 X 8-32
Chassis Mounting Screws
2.625
7.48
6.69
TALON FX
FX

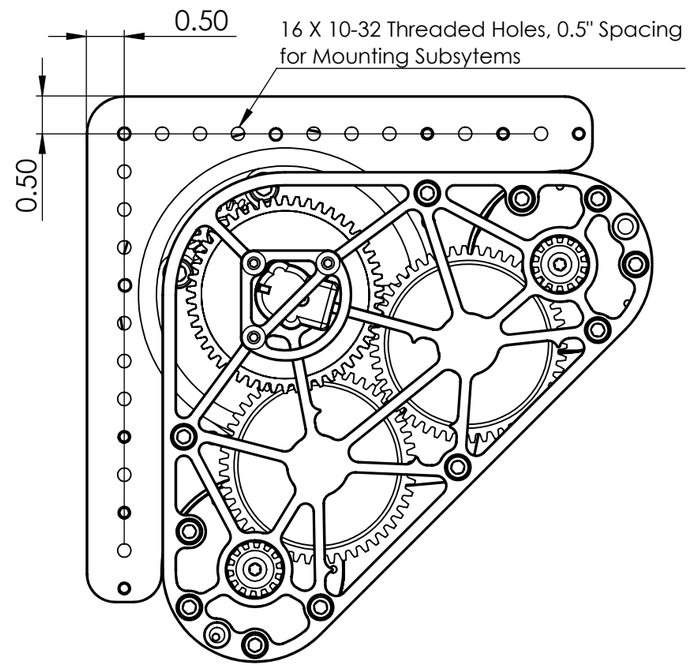
0.50
16 X 10-32 Threaded Holes, 0.5" Spacing
for Mounting Subsytems
0.50

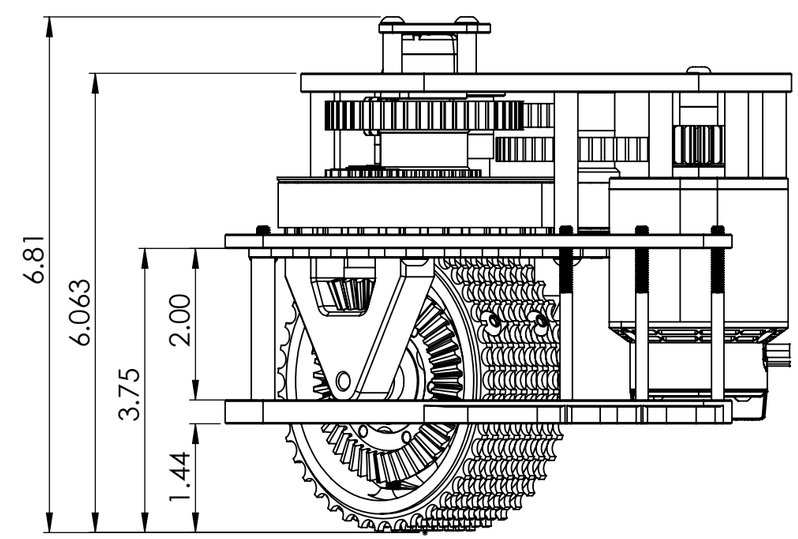
6.81
6.063
3.75
2.00
1.44