REVISION HISTORY			
REV.	DESCRIPTION	DATE	DRAWN BY
1	ORIGINAL PRINT	3/22/2023	P. YEUNG

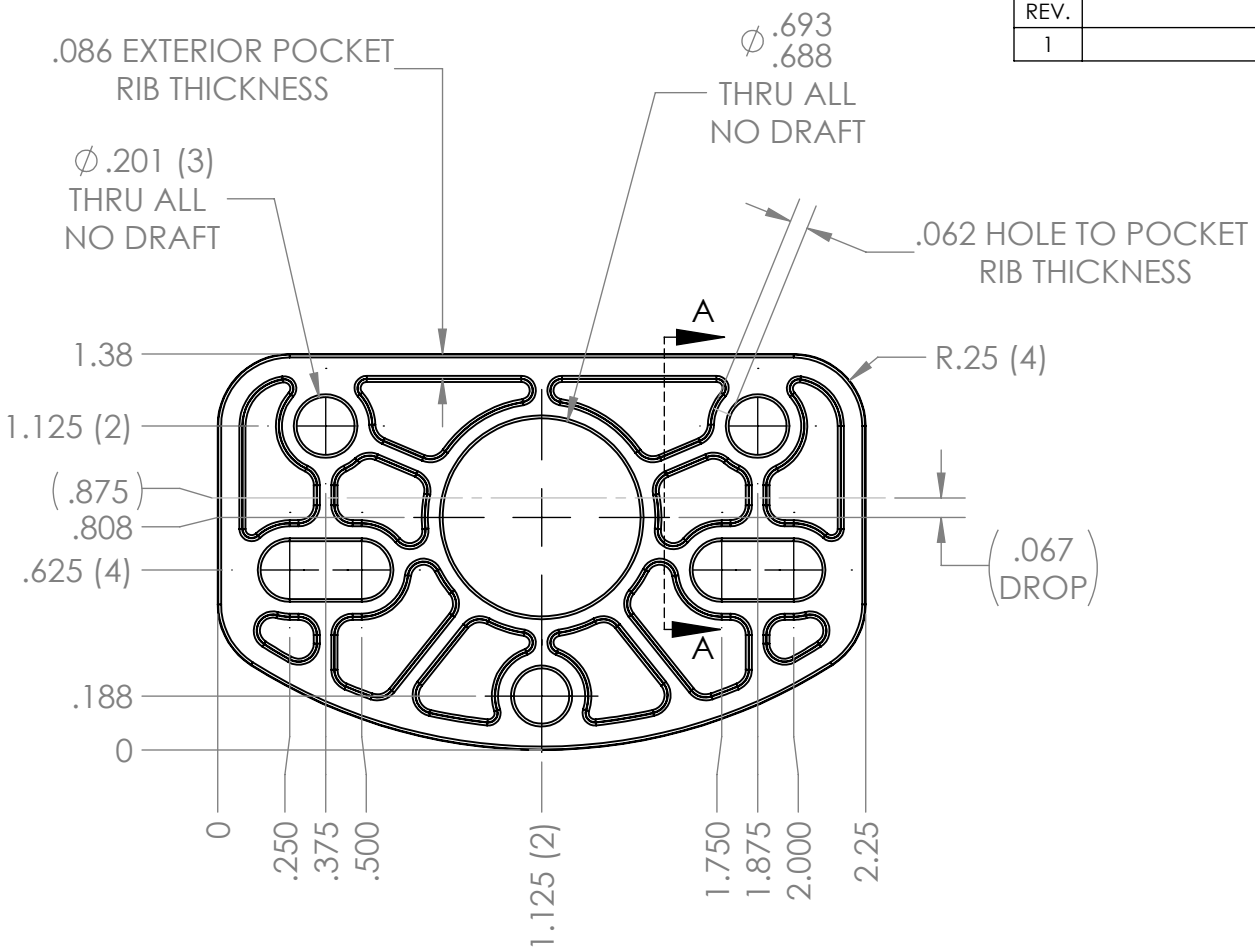

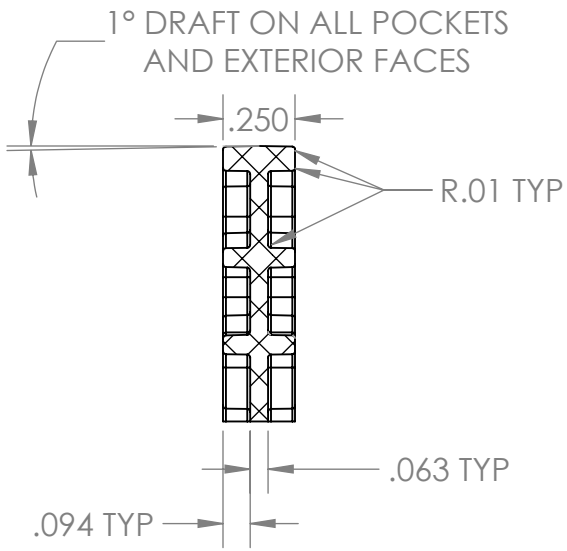

SECTION A-A

*** SEE CAD FOR ADDITIONAL TOOLPATH INFO***

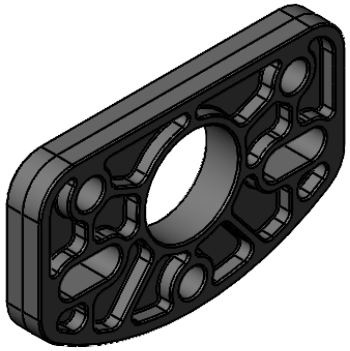

UNLESS OTHERWISE SPECIFIED:	COMMENTS:
DIMENSIONS ARE IN INCHES	DUAL DIMENSIONS ARE IN MILLIMETERS.
TOLERANCES:	BREAK ALL SHARP EDGES.

TOLERANCES:	
FRACTIONAL	±1/16
ANGULAR: MACH	±1°
ANGULAR: BEND	±5°
ONE PLACE DECIMAL	±0.1
TWO PLACE DECIMAL	±0.01
THREE PLACE DECIMAL	±0.005
FOUR PLACE DECIMAL	±0.0005

MATERIAL		NAME	DATE
GRAY POLYCARBONATE	CHECKED	NM	3/23/23
FINISH DEBURRED	ENG APPR.		
	MFG APPR.		
DO NOT SCALE DRAWING	Q.A.		

AndyMark

TITLE: ROBITS DROP MOUNT

SIZE	DWG. NO.	REV
A	am-5019	1

SCALE: 1.5:1 | SHEET 1 OF 1

5 4 3 2 1